UNIVERSITY OF CAMBRIDGE INTERNATIONAL EXAMINATIONS
General Certificate of Education Advanced Level

CANDIDATE NAME

CENTRE NUMBER

CANDIDATE NUMBER

*6791636055*

**PHYSICS** **9702/04**

Paper 4 A2 Structured Questions **May/June 2008**

**1 hour 45 minutes**

Candidates answer on the Question Paper.

No Additional Materials are required.

**READ THESE INSTRUCTIONS FIRST**

Write your Centre number, candidate number and name on all the work you hand in.
Write in dark blue or black pen.
You may use a soft pencil for any diagrams, graphs or rough working.
Do not use staples, paper clips, highlighters, glue or correction fluid.
DO **NOT** WRITE IN ANY BARCODES.

Answer **all** questions.
You may lose marks if you do not show your working or if you do not use appropriate units.

At the end of the examination, fasten all your work securely together.
The number of marks is given in brackets [ ] at the end of each question or part question.

| For Examiner's Use | |
|---|---|
| 1 | |
| 2 | |
| 3 | |
| 4 | |
| 5 | |
| 6 | |
| 7 | |
| 8 | |
| 9 | |
| 10 | |
| 11 | |
| 12 | |
| Total | |

This document consists of **22** printed pages and **2** blank pages.


© UCLES 2008

**Data**

| | |
|---|---|
| speed of light in free space, | $c = 3.00 \times 10^{8}\ \text{m s}^{-1}$ |
| permeability of free space, | $\mu_0 = 4\pi \times 10^{-7}\ \text{H m}^{-1}$ |
| permittivity of free space, | $\varepsilon_0 = 8.85 \times 10^{-12}\ \text{F m}^{-1}$ |
| elementary charge, | $e = 1.60 \times 10^{-19}\ \text{C}$ |
| the Planck constant, | $h = 6.63 \times 10^{-34}\ \text{J s}$ |
| unified atomic mass constant, | $u = 1.66 \times 10^{-27}\ \text{kg}$ |
| rest mass of electron, | $m_e = 9.11 \times 10^{-31}\ \text{kg}$ |
| rest mass of proton, | $m_p = 1.67 \times 10^{-27}\ \text{kg}$ |
| molar gas constant, | $R = 8.31\ \text{J K}^{-1}\ \text{mol}^{-1}$ |
| the Avogadro constant, | $N_A = 6.02 \times 10^{23}\ \text{mol}^{-1}$ |
| the Boltzmann constant, | $k = 1.38 \times 10^{-23}\ \text{J K}^{-1}$ |
| gravitational constant, | $G = 6.67 \times 10^{-11}\ \text{N m}^2\ \text{kg}^{-2}$ |
| acceleration of free fall, | $g = 9.81\ \text{m s}^{-2}$ |

© UCLES 2008

**Formulae**

uniformly accelerated motion, $s = ut + \frac{1}{2}at^2$
$v^2 = u^2 + 2as$

work done on/by a gas, $W = p\Delta V$

gravitational potential, $\phi = -\frac{Gm}{r}$

hydrostatic pressure, $p = \rho gh$

pressure of an ideal gas, $p = \frac{1}{3}\frac{Nm}{V}<c^2>$

simple harmonic motion, $a = -\omega^2 x$

velocity of particle in s.h.m., $v = v_0 \cos \omega t$
$v = \pm \omega \sqrt{(x_0^2 - x^2)}$

electric potential, $V = \frac{Q}{4\pi\varepsilon_0 r}$

capacitors in series, $1/C = 1/C_1 + 1/C_2 + \ldots$

capacitors in parallel, $C = C_1 + C_2 + \ldots$

energy of charged capacitor, $W = \frac{1}{2}QV$

resistors in series, $R = R_1 + R_2 + \ldots$

resistors in parallel, $1/R = 1/R_1 + 1/R_2 + \ldots$

alternating current/voltage, $x = x_0 \sin \omega t$

radioactive decay, $x = x_0 \exp(-\lambda t)$

decay constant, $\lambda = \frac{0.693}{t_{\frac{1}{2}}}$

© UCLES 2008

## Section A

Answer **all** the questions in the spaces provided.

**1 (a) (i)** Define the *radian*.

.....

.....

.....[2]

**(ii)** A small mass is attached to a string. The mass is rotating about a fixed point P at constant speed, as shown in Fig. 1.1.

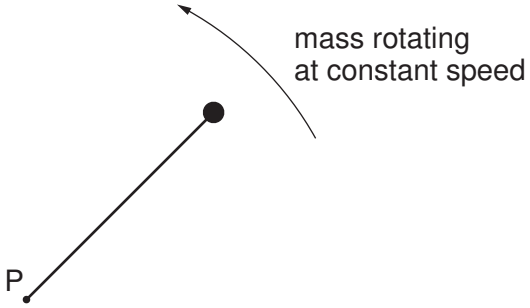


**Fig. 1.1**

Explain what is meant by the *angular* speed about point P of the mass.

.....

.....

.....[2]

© UCLES 2008

**(b)** A horizontal flat plate is free to rotate about a vertical axis through its centre, as shown in Fig. 1.2.

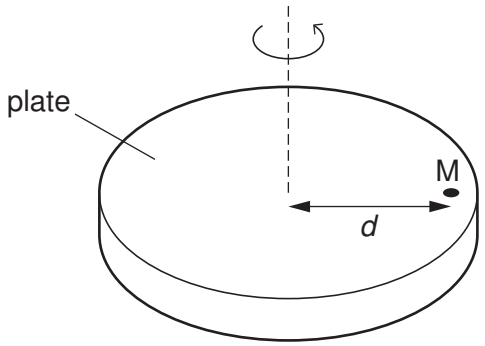


**Fig. 1.2**

A small mass M is placed on the plate, a distance *d* from the axis of rotation.
The speed of rotation of the plate is gradually increased from zero until the mass is seen to slide off the plate.

The maximum frictional force *F* between the plate and the mass is given by the expression

$$F = 0.72W,$$

where *W* is the weight of the mass M.
The distance *d* is 35 cm.

Determine the maximum number of revolutions of the plate per minute for the mass M to remain on the plate. Explain your working.

number = .....[5]

**(c)** The plate in **(b)** is covered, when stationary, with mud.
Suggest and explain whether mud near the edge of the plate or near the centre will first leave the plate as the angular speed of the plate is slowly increased.

.....

.....

.....[2]

**2** **(a)** Explain qualitatively how molecular movement causes the pressure exerted by a gas.

.....

.....

.....

.....[3]

**(b)** The density of neon gas at a temperature of 273 K and a pressure of $1.02 \times 10^5$ Pa is 0.900 kg m$^{-3}$. Neon may be assumed to be an ideal gas.

Calculate the root-mean-square (r.m.s.) speed of neon atoms at

**(i)** 273 K,

speed = ..... m s$^{-1}$ [3]

**(ii)** 546 K.

speed = ..... m s$^{-1}$ [2]

**(c)** The calculations in **(b)** are based on the density for neon being 0.900 kg $m^{-3}$.
Suggest the effect, if any, on the root-mean-square speed of changing the density at constant temperature.

.....

.....

.....[2]

**3** A tube, closed at one end, has a uniform area of cross-section. The tube contains some sand so that the tube floats upright in a liquid, as shown in Fig. 3.1.

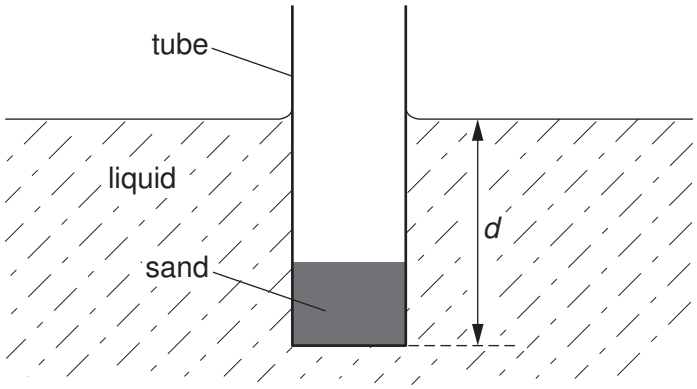


**Fig. 3.1**

When the tube is at rest, the depth *d* of immersion of the base of the tube is 16 cm.
The tube is displaced vertically and then released.
The variation with time *t* of the depth *d* of the base of the tube is shown in Fig. 3.2.

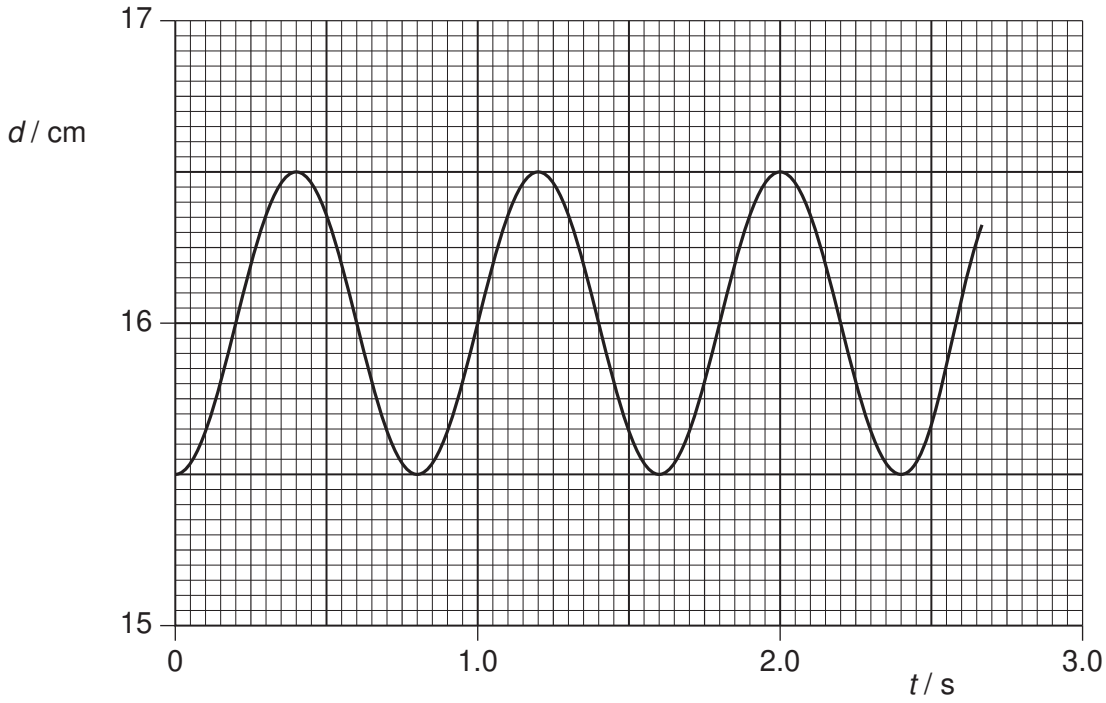


**Fig. 3.2**

**(a)** Use Fig. 3.2 to determine, for the oscillations of the tube,

**(i)** the amplitude,

amplitude = ..... cm [1]

**(ii)** the period.

period = ..... s [1]

© UCLES 2008

**(b) (i)** Calculate the vertical speed of the tube at a point where the depth $d$ is 16.2 cm.

speed = ..... cm $s^{-1}$ [3]

**(ii)** State **one** other depth $d$ where the speed will be equal to that calculated in **(i)**.

$d$ = ..... cm [1]

**(c) (i)** Explain what is meant by *damping*.

.....

.....

.....

.....[2]

**(ii)** The liquid in **(b)** is now cooled so that, although the density is unchanged, there is friction between the liquid and the tube as it oscillates. Having been displaced, the tube completes approximately 10 oscillations before coming to rest.
On Fig. 3.2, draw a line to show the variation with time $t$ of depth $d$ for the first 2.5 s of the motion. [3]

© UCLES 2008

**4** **(a)** Define *electric potential* at a point.

.....

.....

.....[2]

**(b)** Two isolated point charges A and B are separated by a distance of 30.0 cm, as shown in Fig. 4.1.

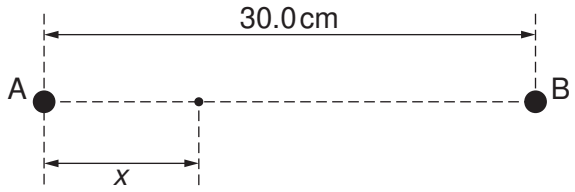


**Fig. 4.1**

The charge at A is + 3.6 × $10^{-9}$ C.
The variation with distance *x* from A along AB of the potential *V* is shown in Fig. 4.2.

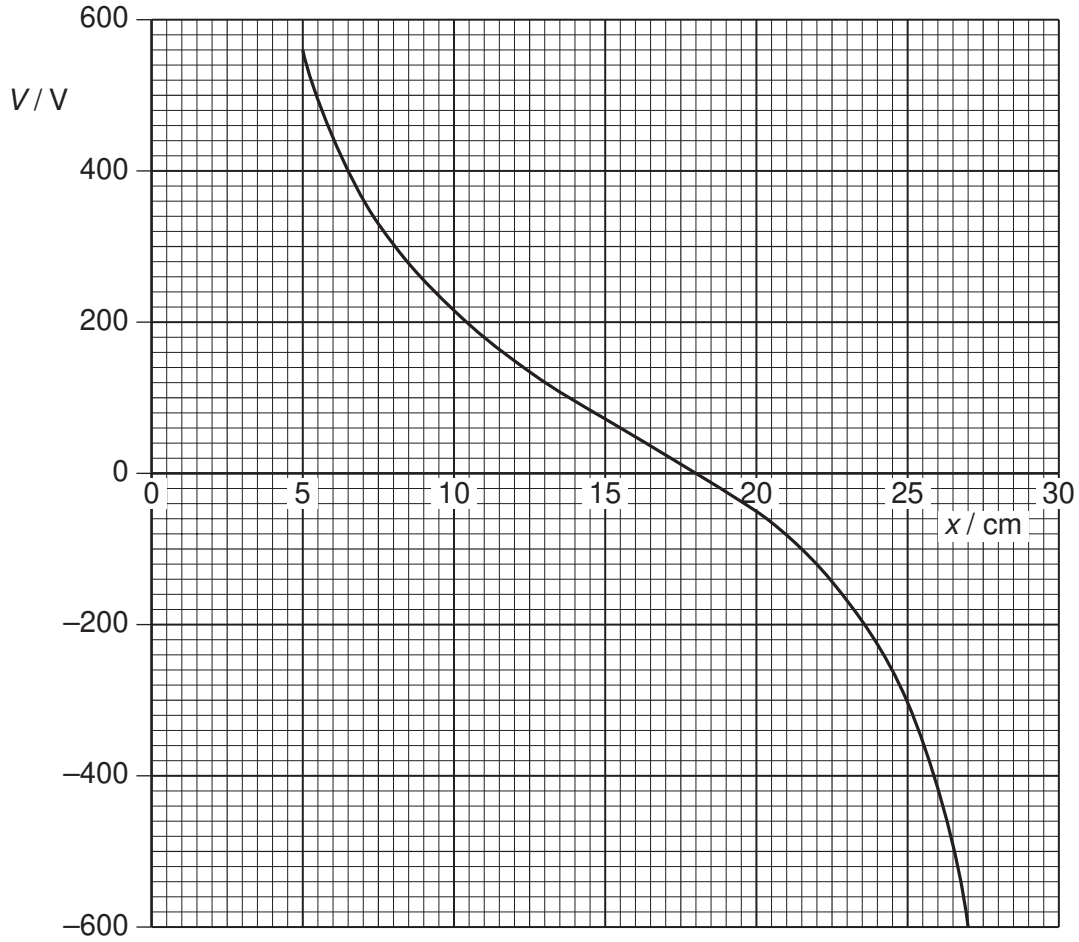


**Fig. 4.2**

**(i)** State the value of $x$ at which the potential is zero.

$x$ = ..... cm [1]

**(ii)** Use your answer in **(i)** to determine the charge at B.

charge = ..... C [3]

**(c)** A small test charge is now moved along the line AB in **(b)** from $x = 5.0$ cm to $x = 27$ cm. State and explain the value of $x$ at which the force on the test charge will be maximum.

.....

.....

.....

.....[3]

© UCLES 2008

**5** A capacitor C is charged using a supply of e.m.f. 8.0 V. It is then discharged through a resistor R.
The circuit is shown in Fig. 5.1.

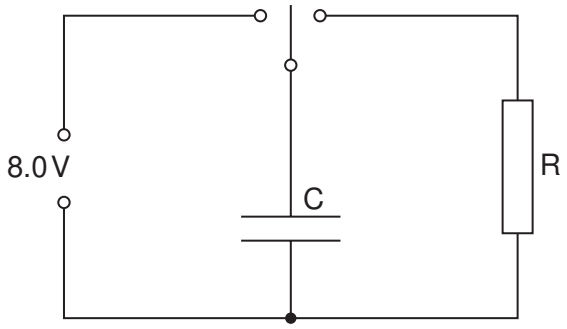


**Fig. 5.1**

The variation with time $t$ of the potential difference $V$ across the resistor R during the discharge of the capacitor is shown in Fig. 5.2.

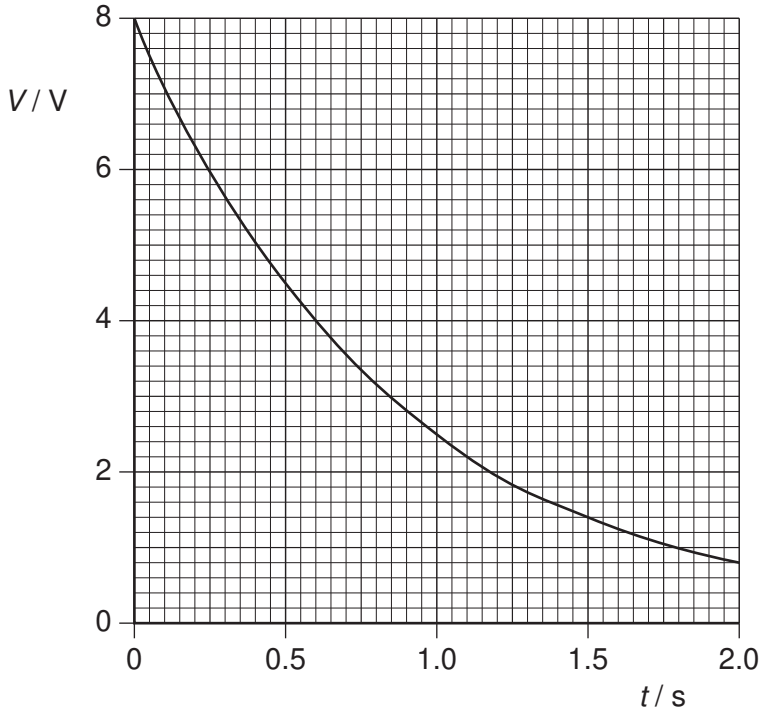


**Fig. 5.2**

**(a)** During the first 1.0 s of the discharge of the capacitor, 0.13 J of energy is transferred to the resistor R.
Show that the capacitance of the capacitor C is 4500 μF.

[3]

© UCLES 2008

**(b)** Some capacitors, each of capacitance 4500 μF with a maximum working voltage of 6 V, are available.

Draw an arrangement of these capacitors that could provide a total capacitance of 4500 μF for use in the circuit of Fig. 5.1.

[2]

**6** A small rectangular coil ABCD contains 140 turns of wire. The sides AB and BC of the coil are of lengths 4.5 cm and 2.8 cm respectively, as shown in Fig. 6.1.

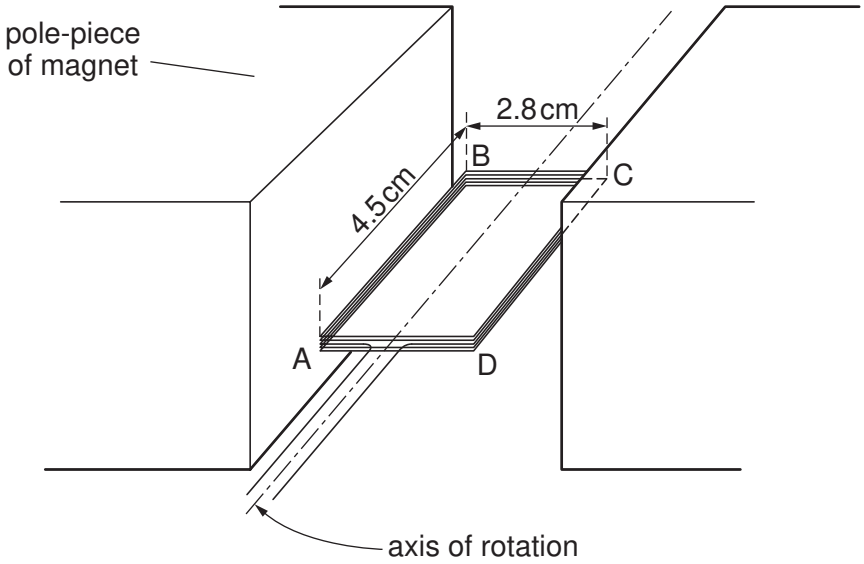


**Fig. 6.1**

The coil is held between the poles of a large magnet so that the coil can rotate about an axis through its centre.
The magnet produces a uniform magnetic field of flux density $B$ between its poles.
When the current in the coil is 170 mA, the maximum torque produced in the coil is $2.1 \times 10^{-3}$ N m.

**(a)** For the coil in the position for maximum torque, state whether the plane of the coil is parallel to, or normal to, the direction of the magnetic field.

.....[1]

**(b)** For the coil in the position shown in Fig. 6.1, calculate the magnitude of the force on

**(i)** side AB of the coil,

force = ..... N [2]

© UCLES 2008

**(ii)** side BC of the coil.

force = ..... N [1]

**(c)** Use your answer to **(b)(i)** to show that the magnetic flux density *B* between the poles of the magnet is 70 mT.

[2]

**(d)** **(i)** State Faraday's law of electromagnetic induction.

.....

.....

.....[2]

**(ii)** The current in the coil in **(a)** is switched off and the coil is positioned as shown in Fig. 6.1.
The coil is then turned through an angle of 90° in a time of 0.14 s.
Calculate the average e.m.f. induced in the coil.

e.m.f. = ..... V [3]

© UCLES 2008

**7** The Millikan oil-drop experiment enabled the charge on the electron to be determined.

**(a)** State a fundamental property of charge that was suggested by this experiment.

.....

.....[1]

**(b)** Two parallel metal plates P and Q are situated in a vacuum. The plates are horizontal and separated by a distance of 5.4 mm, as illustrated in Fig. 7.1.

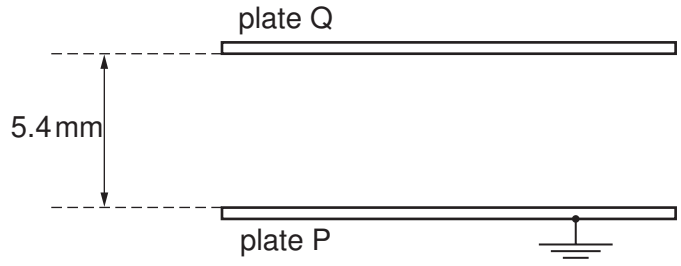


**Fig. 7.1**

The lower plate P is earthed. The potential difference between the plates can be varied. An oil droplet of mass $7.7 \times 10^{-15}$ kg is observed to remain stationary between the plates when plate Q is at a potential of +850 V.

**(i)** Suggest why plates P and Q must be parallel and horizontal.

.....

.....

.....[2]

**(ii)** Calculate the charge, with its sign, on the oil droplet.

charge = ..... C [3]

**(c)** The procedure in **(b)** was repeated for three further oil droplets. The magnitude of the charge on each of the droplets was found to be $3.2 \times 10^{-19}$ C, $6.4 \times 10^{-19}$ C and $3.2 \times 10^{-19}$ C.

Explain what value these data and your answer in **(b)(ii)** would suggest for the charge on the electron.

.....

.....

.....[1]

**8** A positron ($_{+1}^{0}e$) is a particle that has the same mass as an electron and has a charge of $+1.6 \times 10^{-19}$ C.
A positron will interact with an electron to form two $\gamma$-ray photons.

$$_{+1}^{0}e + _{-1}^{0}e \rightarrow 2\gamma$$

Assuming that the kinetic energy of the positron and the electron is negligible when they interact,

**(a)** suggest why the two photons will move off in opposite directions with equal energies,

.....

.....

.....

.....

.....

.....[3]

**(b)** calculate the energy, in MeV, of one of the $\gamma$-ray photons.

energy = ..... MeV [3]

© UCLES 2008

## Section B

Answer **all** the questions in the spaces provided.

**9** A block diagram for an electronic sensor is shown in Fig. 9.1.




**Fig. 9.1**

**(a)** Complete Fig. 9.1 by labelling the remaining boxes. [2]

**(b)** A device is to be built that will emit a red light when its input is at +2 V. When the input is at –2 V, the light emitted is to be green.

**(i)** On Fig. 9.2, draw a circuit diagram of the device.

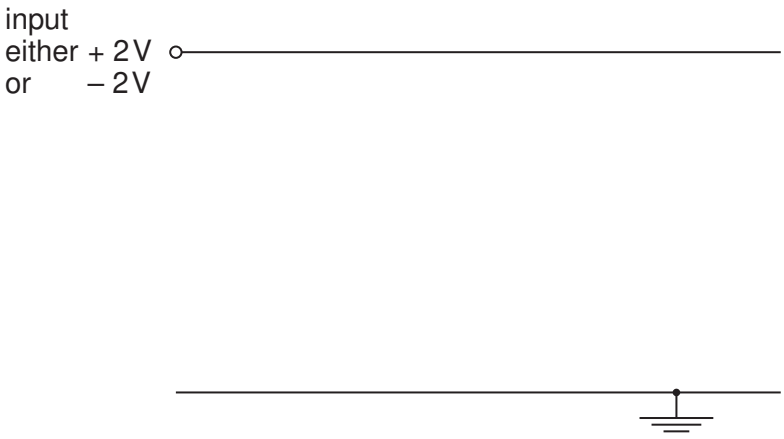


[2]

**Fig. 9.2**

**(ii)** Explain briefly the action of this device.

.....

.....[1]

**10** Outline briefly the main principles of the use of magnetic resonance to obtain information about internal body structures.

.....

.....

.....

.....

.....

.....

.....

.....

.....

.....

.....

.....[8]

**11 (a) (i)** Describe what is meant by *frequency modulation*.

.....

.....

.....[2]

**(ii)** A sinusoidal carrier wave has frequency 500 kHz and amplitude 6.0 V. It is to be frequency modulated by a sinusoidal wave of frequency 8 kHz and amplitude 1.5 V. The frequency deviation of the carrier wave is 20 kHz $V^{-1}$.
Describe, for the carrier wave, the variation (if any) of

**1.** the amplitude,

.....

.....[1]

**2.** the frequency.

.....

.....

.....

.....[3]

**(b)** State two reasons why the cost of FM broadcasting to a particular area is greater than that of AM broadcasting.

1 .....

.....

2 .....

.....[2]

**12** **(a)** Optic fibre transmission has, in some instances, replaced transmission using co-axial cables and wire pairs.
Optic fibres have negligible cross-talk and are less noisy than co-axial cables.
Explain what is meant by

**(i)** cross-talk,

.....

.....

.....[2]

**(ii)** noise.

.....

.....

.....[2]

**(b)** An optic fibre has a signal attenuation of $0.20\,\text{dB}\,\text{km}^{-1}$.
The input signal to the optic fibre has a power of 26 mW. The receiver at the output of the fibre has a noise power of 6.5 μW.
Calculate the maximum uninterrupted length of optic fibre given that the signal-to-noise ratio at the receiver must not be less than 30 dB.

length = ..... km [5]

© UCLES 2008

**BLANK PAGE**

**BLANK PAGE**

Permission to reproduce items where third-party owned material protected by copyright is included has been sought and cleared where possible. Every reasonable effort has been made by the publisher (UCLES) to trace copyright holders, but if any items requiring clearance have unwittingly been included, the publisher will be pleased to make amends at the earliest possible opportunity.

University of Cambridge International Examinations is part of the Cambridge Assessment Group. Cambridge Assessment is the brand name of University of Cambridge Local Examinations Syndicate (UCLES), which is itself a department of the University of Cambridge.